The Synthi AKS Matrix Interface Module

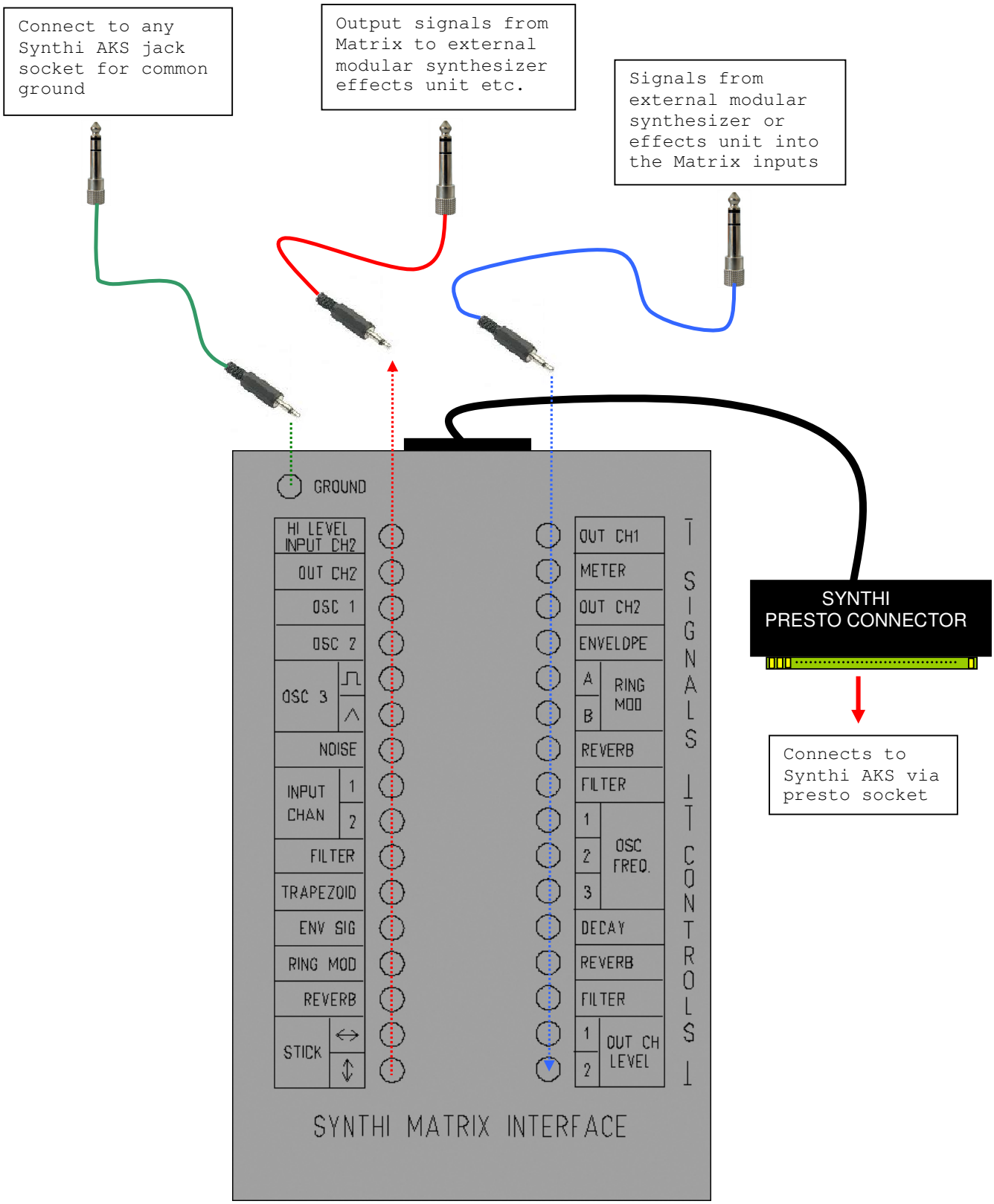

Using the Matrix Interface Module

This unit adopts the same styling of retro trapezoidal plastic case, cnc engraved satin anodised silver front panel that complements the Synthi AKS.
Its a complete interface unit for the Synthi AKS Matrix...or in other words a 'breakout' box whereby the row/column signals of the Matrix are taken out to 3.5mm jack sockets. This allows powerful interfacing options of the Synthi AKS with an external modular synthesizer like eg Doepfer-Eurorack and/or external effects racks etc.

The front panel has faithful reproduction of all the various signals and inputs of the 16 rows and 16 columns of the Synthi matrix. The left hand column are all the 'sources' and 'treatments' from the Matrix (oscillators, filter, envelope, trapezoid outputs etc) and the right hand column has all the various control/signal inputs of the Synthi. The ordering/labelling is exactly the same as on the Synthi AKS Matrix, the only difference is that instead of **Output Ch1** as labelling the first jack socket at the top left column of jacks, it is **High level Input ch2**. This allows an external input to be fed into the matrix other than the through the usual Input ch1 and Input ch2 1/4" sockets on the Synthi itself.

The module connects to the Synthi AKS via the presto-socket. Here is the pin numbering of the 32 way edge contact pcb that inserts into this socket (it's the same pin assignment as found on original EMS 'prestopatches')

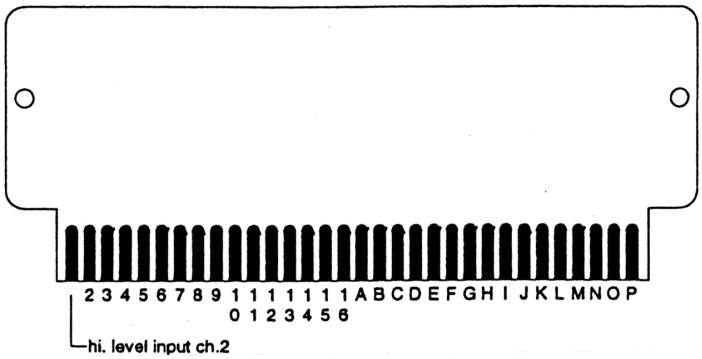

All the signal/control inputs (right hand column of jacks) have 2.7k series resistors connected internally so taking signals in/out of the matrix using standard 3.5mm mono jack plug cables via this breakout box gives the same attenuation as inserting standard matrix resistor pins.

Connection to external synthesizers etc is via standard jackplug leads (ie with signal at the 'tip' of the plug) with 3.5mm mono jackplugs used to connect to the interface unit. These connections also join the ground of the external equipment to Synthi ground which is important. Patches can be a combination of those created with patchpins in the usual way and jackleads from the unit to route Synthi signals out to external equipment and send external signals (such as waveforms, envelopes, filter out, effect etc) back into the Matrix.

In this way the unit can act as a unique interface, leading to a powerful symbiosis of Synthi AKS and external Modular Synthesizers/effects and signal processing equipment.

Designed by Digitana,
St Albans, England, 2009

Note: please take care not to put too large voltage signals into the matrix.
For example the Synthi Oscillators themselves do not exceed 3V p-p, the ring mod 6V p-p etc. So you should limit the voltage swing of external signals fed into the matrix. All inputs into the matrix are protected by 2.7K resistors.